US008291776B1

(12) **United States Patent**
Pickens et al.

(10) **Patent No.: US 8,291,776 B1**
(45) **Date of Patent: Oct. 23, 2012**

(54) **FORCE SENSOR USING CHANGES IN MAGNETIC FLUX**

(75) Inventors: **Herman L. Pickens**, Gurley, AL (US); **James A. Richard**, Grant, AL (US)

(73) Assignee: **The United States of America as represented by the Administrator of the National Aeronautics and Space Administration**, Washington, DC (US)

(*) Notice: Subject to any disclaimer, the term of this patent is extended or adjusted under 35 U.S.C. 154(b) by 255 days.

(21) Appl. No.: **12/827,515**

(22) Filed: **Jun. 30, 2010**

(51) **Int. Cl.**
G01L 1/12 (2006.01)

(52) **U.S. Cl.** **73/862.69**; 73/779

(58) **Field of Classification Search** 73/779, 73/862.69
See application file for complete search history.

(56) **References Cited**

U.S. PATENT DOCUMENTS

5,184,037 A * 2/1993 Kobayashi et al. 310/26
5,557,974 A 9/1996 Hase et al.
5,602,434 A 2/1997 Riedl
5,831,180 A 11/1998 Tanaka et al.
5,850,109 A 12/1998 Mock et al.
5,905,210 A * 5/1999 O'Boyle et al. 73/862.331
5,982,054 A 11/1999 Rathore et al.
6,189,391 B1 2/2001 Wittenstein et al.
6,237,428 B1 5/2001 Odachi et al.
6,246,132 B1 * 6/2001 Joshi et al. 310/26
6,294,849 B1 9/2001 Teter
6,439,066 B1 8/2002 Norton
6,622,577 B1 * 9/2003 Uras 73/862.69
6,912,922 B2 7/2005 Cheshmehdoost et al.
6,931,940 B2 8/2005 Baudendistel
6,988,414 B2 1/2006 Ruhrig et al.
7,234,361 B2 6/2007 Lequesne et al.
7,362,096 B2 4/2008 Oberdier et al.
2004/0187606 A1 9/2004 Nehl et al.
2005/0160835 A1 7/2005 Masaki et al.

FOREIGN PATENT DOCUMENTS

JP 2001174263 A 6/2001

* cited by examiner

Primary Examiner — Max Noori
(74) *Attorney, Agent, or Firm* — Peter J. Van Bergen; James J. McGroary

(57) **ABSTRACT**

A force sensor includes a magnetostrictive material and a magnetic field generator positioned in proximity thereto. A magnetic field is induced in and surrounding the magnetostrictive material such that lines of magnetic flux pass through the magnetostrictive material. A sensor positioned in the vicinity of the magnetostrictive material measures changes in one of flux angle and flux density when the magnetostrictive material experiences an applied force that is aligned with the lines of magnetic flux.

13 Claims, 2 Drawing Sheets

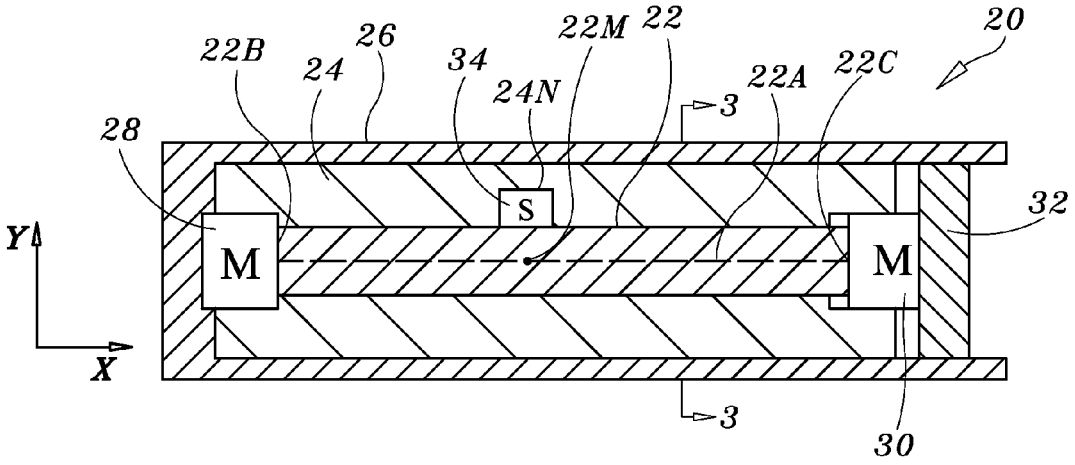

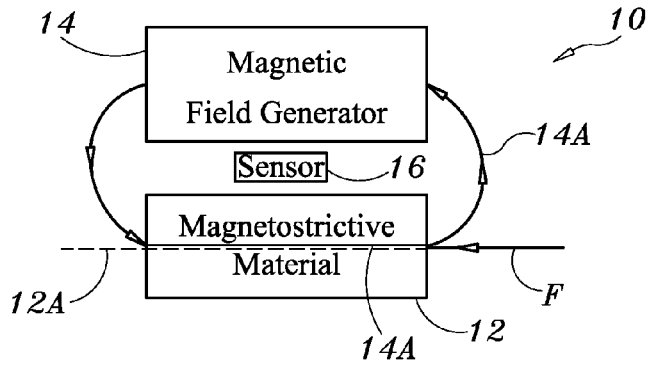

FIG. 1

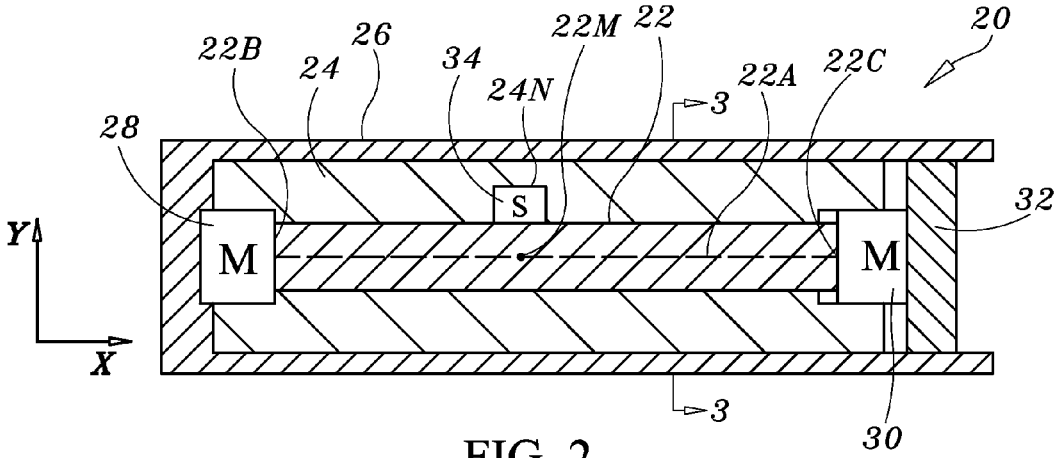

FIG. 2

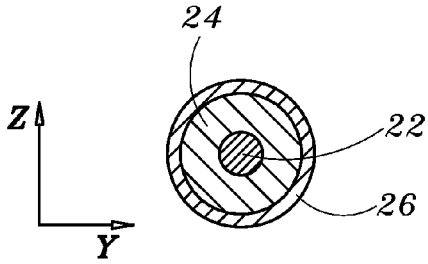

FIG. 3

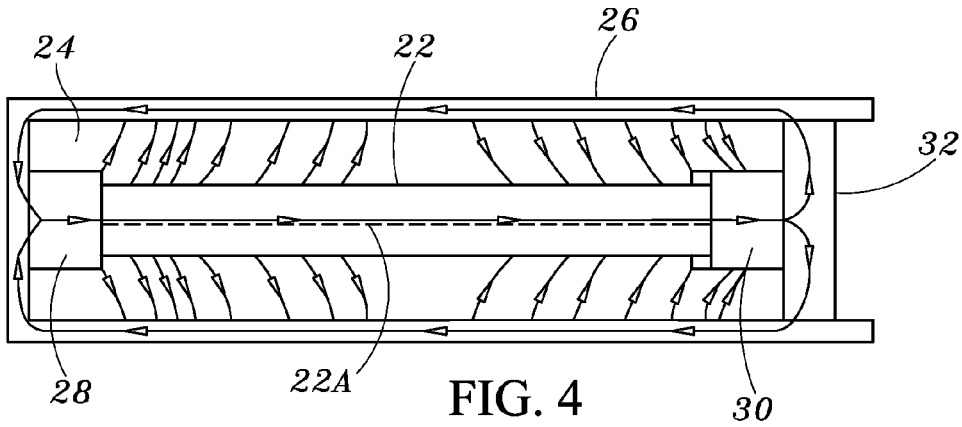

FIG. 4

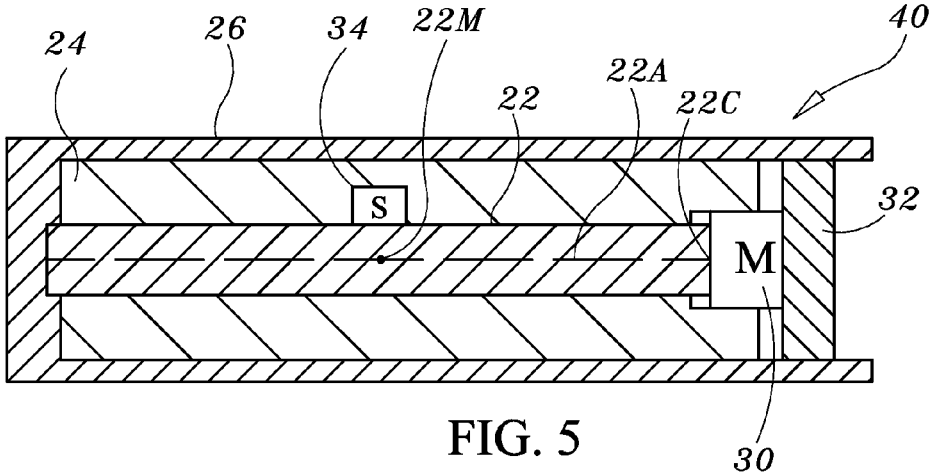

FIG. 5

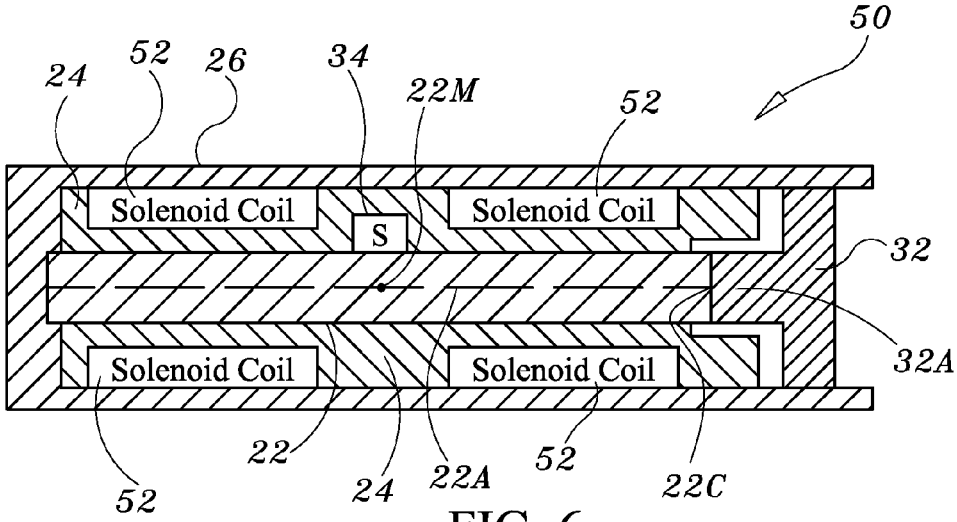

FIG. 6

FORCE SENSOR USING CHANGES IN MAGNETIC FLUX

ORIGIN OF THE INVENTION

The invention described herein was made in the performance of work under a NASA contract and by an employee of the United States Government and is subject to the provisions of Public Law 96-517 (35 U.S.C §202) and may be manufactured and used by or for the Government for governmental purposes without the payment of any royalties thereon or therefore. In accordance with 35 U.S.C §202, the contractor elected not to retain title.

BACKGROUND OF THE INVENTION

1. Field of the Invention

This invention relates to sensors used to measure force. More specifically, the invention is a force sensor that relates a force applied to the sensor to a change in magnetic flux caused by the force.

2. Description of the Related Art

In many aerospace applications, cryogenic temperatures are encountered. Accordingly, systems operating in these environs must be able to tolerate the extreme temperatures. The reliability of these systems can be compromised by even the smallest components such as the sensors (e.g., force sensors) used to initiate various system operations.

SUMMARY OF THE INVENTION

Accordingly, it is an object of the present invention to provide a force sensor.

Another object of the present invention is to provide a force sensor that will operate reliably in cryogenic applications.

Other objects and advantages of the present invention will become more obvious hereinafter in the specification and drawings.

In accordance with the present invention, a force sensor includes a magnetostrictive material and a magnetic field generator positioned in proximity to the magnetostrictive material for the purpose of inducing a magnetic field in and surrounding the magnetostrictive material. As a result, lines of magnetic flux pass through the magnetostrictive material. A sensor is positioned in the vicinity of the magnetostrictive material for measuring changes in at least one of flux angle and flux density when the magnetostrictive material experiences an applied force that is aligned with the lines of magnetic flux.

BRIEF DESCRIPTION OF THE DRAWING(S)

Other objects, features and advantages of the present invention will become apparent upon reference to the following description of the preferred embodiments and to the drawings, wherein corresponding reference characters indicate corresponding parts throughout the several views of the drawings and wherein:

FIG. **1** is a top-level schematic view of a force sensor that uses change in flux in accordance with the present invention;

FIG. **2** is a cross-sectional view of a force sensor using two permanent magnets in accordance with an embodiment of the present invention;

FIG. **3** is a cross-sectional view of the force sensor in FIG. **2** taken along line **3-3** thereof;

FIG. **4** illustrates the lines of magnetic flux present in the force sensor during a static state thereof;

FIG. **5** is a cross-sectional view of a force sensor using one permanent magnet in accordance with another embodiment of the present invention; and

FIG. **6** is a cross-sectional view of a force sensor using electromagnets in accordance with another of the embodiment of the present invention.

DESCRIPTION OF THE PREFERRED EMBODIMENT(S)

Referring now to the drawings and more particularly to FIG. **1**, a force sensor that uses change in flux as the means to sense force changes in accordance with the present invention is shown and is referenced generally by numeral **10**. It is to be understood force sensor **10** can be realized by a variety of embodiments thereof without departing from the scope of the present invention. In support of this assertion, several embodiments of force sensors constructed in accordance with the present invention will be described later herein.

At the heart of force sensor **10** is a magnetostrictive material **12** that undergoes change in permeability when a change in force is applied thereto along an axis thereof while material **12** is disposed in a magnetic field having flux lines that are substantially aligned with the axis. In the illustration, the changing force that is applied to magnetostrictive material **12** lies along dashed line **12**A. Force sensor **10** also includes a magnetic field generator **14** capable of producing a magnetic field near material **12** such that an induced magnetic field in and around material **12** causes magnetic flux **14**A to pass through material **12** in substantial alignment with direction **12**A. In other words, magnetic field generator **14** provides a magnetizing force, H, that induces a magnetic field having a magnetic flux density, B, in material **12**. Flux density B is equal to μH where μ is the permeability of material **12**. The magnitude and direction of the magnetic field inside and surrounding material **12** is dependent upon H, μ, and the orientation of the magnetic domains within material **12**. The permeability of material **12** and the orientation of its domains change when a force is applied to material **12**.

Force sensor **10** also includes a magnetic flux sensor **16** positioned adjacent to magnetostrictive material **12** and in the magnetic field thereof. Magnetic flux sensor **16** is any sensor (s) capable of detecting magnetic flux density and/or magnetic flux angle in, for example, a planar dimension of interest. In the absence of any force being applied to material **12** along dimension **12**A, the internal and external magnetic fields associated with material **12** will be static in both magnitude and direction. However, when a force, F, is applied along direction **12**A, the magnetic domains of material rotate. Note that while force F is illustrated as a compressive force on material **12**, it could also be an extensive or tensile force acting on material **12**. In either case, rotation of the magnetic domains causes the internal and external magnetic fields to change in both magnitude and direction, thereby changing the magnetic flux density and flux angle. Accordingly, sensor **16** can be a flux density sensor for detecting flux density change proportioned to force F, or a magnetic angle sensor for detecting angular change in a flux line (vector) caused by force F where such angular change can be measured in a particular plane of reference or in three dimensions. In each case, force sensor **10** would be calibrated prior to use in order to equate known values of force F with corresponding changes in flux density or flux angle.

As mentioned above, the present invention can be realized by a variety of embodiments. For example, the magnetostrictive material could reside in a free-space environment. However, the sensor(s) required to detect flux changes in a free-

space-based force sensor would necessarily have to be extremely sensitive since much of the generated magnetic field would be dispersed in free space. Accordingly, it may be desirable to construct embodiments of the present invention that concentrate the magnetic field in and around the magnetostrictive material. With this goal in mind, several illustrative and non-limiting embodiments of the present invention will be described with the aid of FIGS. **2**-**6**.

Referring first to FIGS. **2** and **3**, a force sensor **20** uses a rod **22** of magnetostrictive material. Rod **22** is an elongated piece of magnetostrictive material whose radial cross-section could be any shape (e.g., circular as shown, triangular, rectangular, octagonal, etc.) without departing from the scope of the present invention. Regardless of its cross-sectional shape, rod **22** will have a longitudinal axis (referenced by dashed line **22**A) with opposing longitudinal ends noted by numerals **22**B and **22**C. Rod **22** further has a center of mass indicated at numeral **22**M. The particular choice of magnetostrictive material is not a limitation of the present invention. For aerospace applications where cryogenic temperatures are encountered, suitable magnetostrictive materials include, but are not limited to, terbium-based compounds such as Terfenol-D which is commercially available from Etrema Products, Inc., gallium-iron compounds such as Galfenol, and rare earth zinc crystal-based compounds such as Terzinol.

Rod **22** is encased within a guide **24** that supports and protects rod **22**. Guide **24** is made from a non-magnetic or low magnetic permeability material, and is sized such that rod **22** slides within guide **24**. The assembly of rod **22** and guide **24** is fitted within an open-ended housing **26** made from a magnetic material having high permeability and low hysteresis. That is, the purpose of housing **26** is to provide a low reluctance path for a magnetic field as will be explained further below. In the illustrated embodiment, guide **24** defines a cylindrical outer surface and housing **26** is an open-ended cylinder. However, it is to be understood that the outer surface of guide **24** and housing **26** could take other geometric shapes without departing from the scope of the present invention. Further, housing **26** could be a one-piece housing or a multiple-piece assembly thereof without departing from the scope of the present invention.

Positioned at opposing longitudinal ends **22**B and **22**C of rod **22** are permanent magnets ("M") **28** and **30**, respectively. The purpose of magnets **28** and **30** is to provide a magnetizing force H that induces the magnetic field in and around rod **22** as will be explained below. In the illustrated embodiment, magnets **28** and **30** are retained by guide **24** with magnet **28** abutting the end of housing **26** and magnet **30** slidingly fitted in guide **24** for reasons that will be explained below.

A piston **32** is slidingly fit within housing and abuts magnet **30**. Piston **32** is similar to housing **26** in terms of its material construction, i.e., magnetic material with high permeability and low hysteresis. Typically, piston **32** is made from the same material as housing **26**.

A flux sensor ("S") **34** is positioned adjacent a surface of rod **22**. For example, flux sensor **34** could be retained within a notch **24**N formed in guide **24** adjacent to a radial surface of rod **22** at a location along rod **22** that is aligned with its center of mass **22**M. This is a typical placement for flux sensor **34** when it is a magnetic flux angle sensor that is sensitive to flux angle changes in a two-dimensional plane such as the x-y plane, i.e., the plane formed with the x-direction along longitudinal axis **22**A and the y-direction along a radius from axis **22**A. Note that a different orientation of such a flux sensor **34** could make measurements in an x-z or y-z plane. When flux density is to be measured, a flux density sensor (not shown) is typically positioned adjacent to an axial end of rod **22**. For clarity of illustration, electrical connections between sensor **34** and a data acquisition system (not shown) have been omitted. Such connections and data acquisition systems (or wireless versions thereof) are well understood in the art.

The combination of housing **26**, magnets **28**/**30**, and piston **32** essentially form a magnetic field generator that induce and confine/concentrate a magnetic field/flux lines in and surrounding rod **22**. The lines of magnetic flux are illustrated in FIG. **4** (where crosshatch lines are omitted for clarity) where the lines of magnetic flux in rod **22** are essentially aligned with its longitudinal axis **22**A. As a result, a closed loop magnetic path is defined by the combination of housing **26**, magnets **28**/**30**, piston **32**, and rod **22**. The lines of magnetic flux illustrated in FIG. **4** are depicted for a static condition, i.e., no force being applied to piston **32**.

When a force is applied to piston **32**, at least a component of this force will act on piston **32** such that it slides in guide **24**. For example, if the axial component of the force drives piston into housing **26**, a compressive axial force is applied to rod **22** as piston **32** pushes magnet **30** axially against end **22**C of rod **22**. This causes the magnetic domains of rod **22** to rotate, thereby changing the angular orientation of the flux lines where such change (e.g., relative to the static condition) is sensed by flux sensor **34**. Note that if the force sensor must be sensitive to an extensive or tensile force, piston **32**, magnet **30** and end **22** of rod **22** must be coupled to one another.

As mentioned above, the principles of the present invention could be practiced in a variety of embodiments. For example, FIG. **5** illustrates another embodiment of the present invention where force sensor **40** uses essentially the same components just described, but only uses a single permanent magnet **30** to produce the magnetizing force for rod **22**. FIG. **6** depicts another embodiment of the present invention where a force sensor **50** utilizes an electromagnet(s) to produce the magnetizing force. More specifically, one or more solenoid coils **52** are wrapped about guide **24** along rod **22**. For example, two solenoid coils **52** could be used to facilitate the placement of sensor **34**. Electrical connections to coils **52** as well as their drive source are omitted for clarity of illustration. In this example, piston **32** will typically include a plunger portion **32**A slidingly fitted in guide **24** and abutting (or coupled to) longitudinal end **22**C of rod **22**. The operating principles of these additional embodiments are the same as previously described.

The advantages of the present invention are numerous. The force sensor converts a mechanical force to a change in magnetic angle or magnetic density. The sensor's closed-loop magnetic path incorporating a magnetostrictive material is readily adapted for both cryogenic and non-cryogenic environments and applications.

Although the invention has been described relative to a specific embodiment thereof, there are numerous variations and modifications that will be readily apparent to those skilled in the art in light of the above teachings. It is therefore to be understood that, within the scope of the appended claims, the invention may be practiced other than as specifically described.

What is claimed as new and desired to be secured by Letters Patent of the United States is:

1. A force sensor, comprising:

a rod made from a magnetostrictive material, said rod having a longitudinal axis;

a substantially non-magnetic housing encasing said rod and supporting sliding movement of said rod therein in a direction aligned with said longitudinal axis thereof;

a magnetic field generator supporting said housing and said rod, said magnetic field generator inducing a magnetic field in and surrounding said rod wherein lines of magnetic flux pass through said rod and are substantially aligned with said longitudinal axis thereof; and

a sensor positioned adjacent to said rod and in said magnetic field for measuring changes in at least one of flux angle and flux density when said rod experiences an applied force that is aligned with said longitudinal axis thereof such that said rod slides within said housing.

2. A force sensor as in claim **1**, wherein said magnetic field generator includes at least one permanent magnet.

3. A force sensor as in claim **1**, wherein said magnetic field generator includes at least one electromagnet.

4. A force sensor as in claim **1**, wherein a combination of said rod and said magnetic field generator comprise a closed-loop magnetic path.

5. A force sensor as in claim **1**, wherein said magnetostrictive material is selected from the group consisting of terbium-based compounds, gallium-iron compounds, and rare earth zinc crystal-based compounds.

6. A force sensor as in claim **1**, wherein said sensor is approximately aligned with a center of mass of said rod.

7. A force sensor, comprising:

a rod made from a magnetostrictive material, said rod having a longitudinal axis;

a magnetic field generator supporting said rod and inducing a magnetic field in and surrounding said rod wherein lines of magnetic flux pass through said rod and are substantially aligned with said longitudinal axis thereof, said magnetic field generator including a movable piston made from a magnetic material, said piston coupled to a first of opposing longitudinal ends of said rod for movement in a direction aligned with said longitudinal axis of said rod; and

a sensor positioned adjacent to a surface of said rod for measuring changes in one of flux angle and flux density when said piston experiences said movement wherein a force is applied to said rod that is aligned with said longitudinal axis thereof.

8. A force sensor as in claim **7**, wherein said magnetic field generator includes a permanent magnet positioned between said piston and said first of said opposing longitudinal ends of said rod.

9. A force sensor as in claim **8**, wherein said magnetic field generator further includes a second permanent magnet positioned adjacent to a second of said opposing longitudinal ends of said rod.

10. A force sensor as in claim **7**, wherein said magnetic field generator includes at least one electromagnet disposed about said radial surface of said rod.

11. A force sensor as in claim **7**, wherein a combination of said rod and said magnetic field generator comprise a closed-loop magnetic path.

12. A force sensor as in claim **7**, wherein said magnetostrictive material is selected from the group consisting of terbium-based compounds, gallium-iron compounds, and rare earth zinc crystal-based compounds.

13. A force sensor as in claim **7**, wherein said sensor is approximately aligned with a center of mass of said rod.

* * * * *